- Installation and wiring of luminaire must be in accordance with all applicable local codes.
- Installation, inspection, and maintenance of luminaires should be performed by a qualified electrician.
- DO NOT make or alter any open holes in the luminaire. Do not modify the luminaire.
- DO NOT install damaged product.
- Make sure electrical power is OFF before and during installation and maintenance.
- Make sure the equipment is properly grounded.
- Make sure the supply voltage is same as the rated fixture voltage.

1

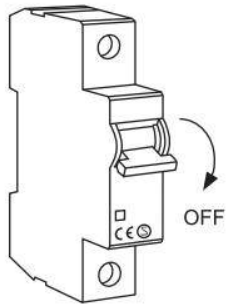

2

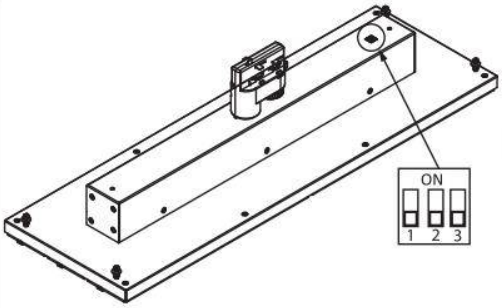

Before use, always checkdip switch settings

1	2	3	Power(W)
—	—	—	70
ON	—	—	64
ON	ON	—	57
ON	ON	ON	50

3

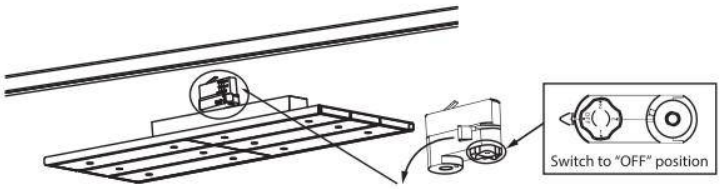

Fix this lever in this position before putting the luminaire into the rail

4

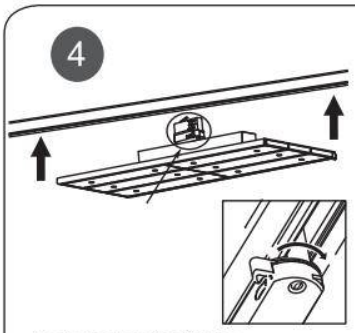

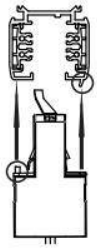

Lock the luminaire by turning this lever

The adaptor flange is in the same direction with the track plane.

5

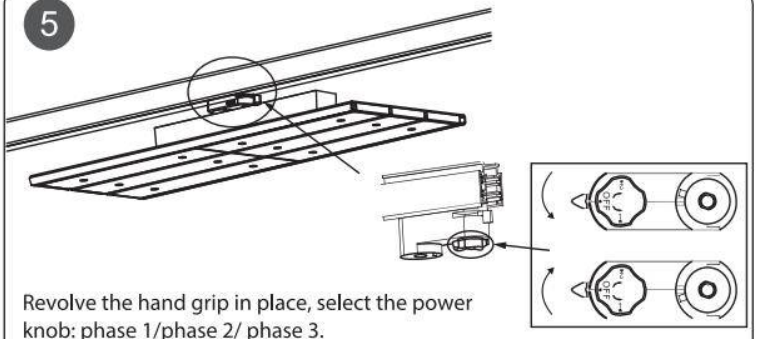

Revolve the hand grip in place, select the power knob: phase 1/phase 2/ phase 3.
Can swing clockwise and anticlockwise.

Select phase "1","2"or "3"

6

350° Flexible

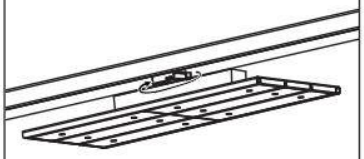
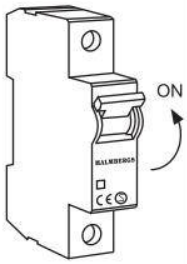
7